All rights reserved. Specifications subject to change without notice.

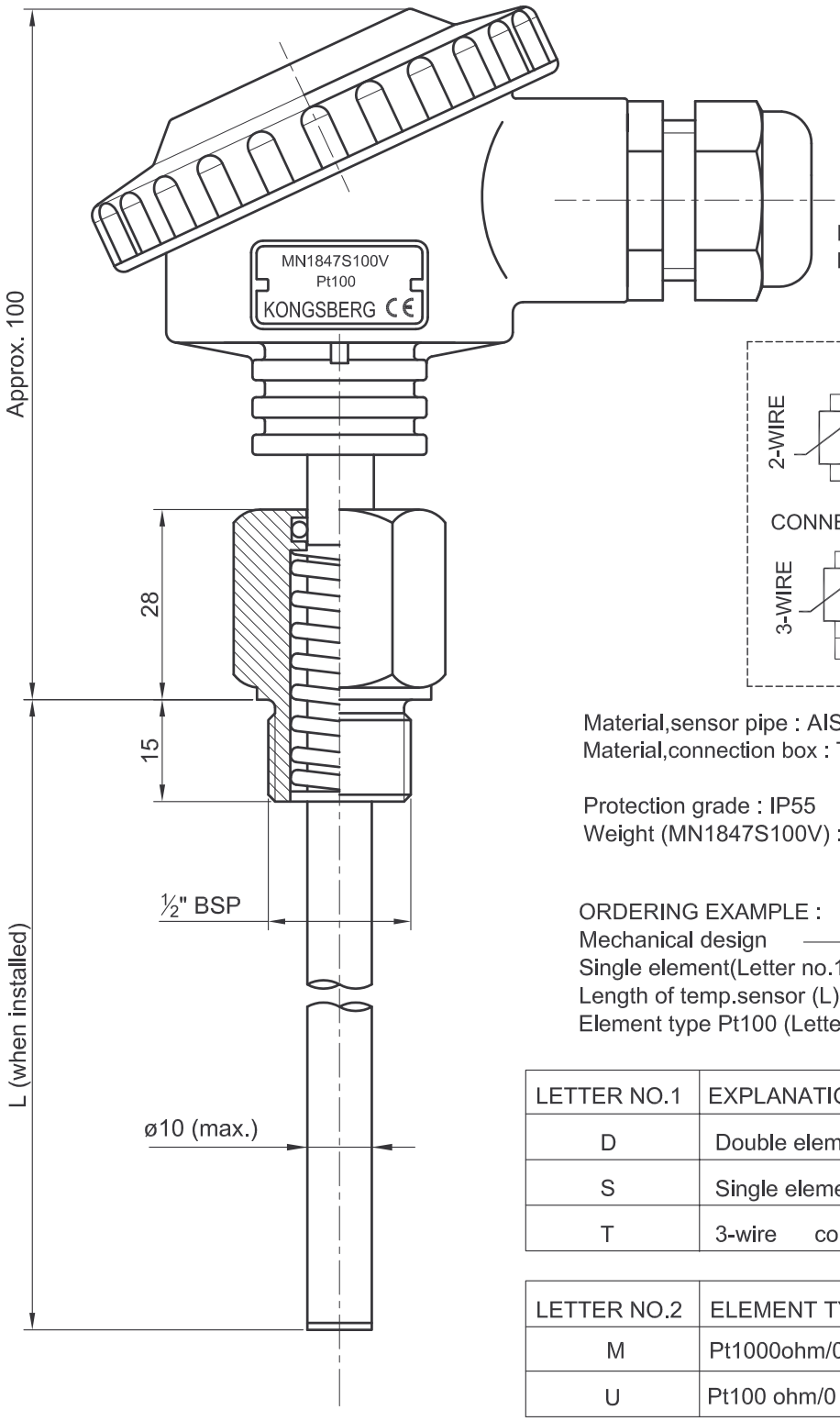

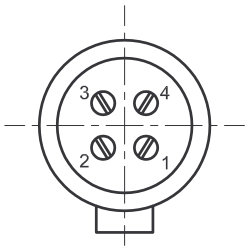

Nipple PG16, Skintop
Max.cable diam.ø14

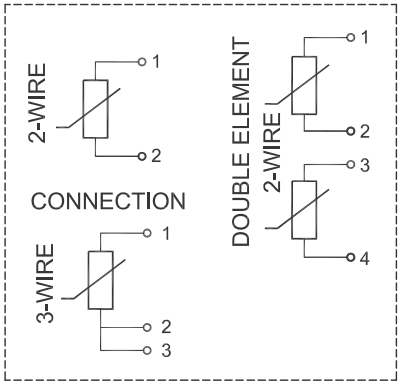

Material,sensor pipe : AISI 304
Material,connection box : Thermoplastic polyester

Protection grade : IP55
Weight (MN1847S100V) : 400 g.

ORDERING EXAMPLE : MN1847S 100 U
Mechanical design
Single element(Letter no.1)
Length of temp.sensor (L),in mm
Element type Pt100 (Letter no.2)

LETTER NO.1	EXPLANATION
D	Double element
S	Single element, 2-wire
T	3-wire connection

LETTER NO.2	ELEMENT TYPE	RANGE
M	Pt1000ohm/0 °C	-50 to 200 °C
U	Pt100 ohm/0 °C	-50 to 200 °C

S.DWG. : MN-1854

Rev.	Description	Date/Sign.
D	Ordering ex., 140688, AK/ES	
H	130 -> 200Ø, 060614, MaV/	
G	T802 ut, 030708, VRa/AJK	
F	New nipple, 981130, MaV/AJK	

Date	Dsgn/Dwn	Trac	Scale/Format
15.12.89	AJK		1:1
Checked	Spec Ctrl.	Approved	
OLy		AJK	

Kongsberg Maritime AS
Automation
Trondheim

Temperature sensor type MN1847---

DIMENSIONAL SKETCH

Repl. for	Repl. by	Next sheet

Dwg no.	Sh.no.	Rev.	Lang.
MN-1847		H	